NEW DOOR TYPES
Speed sectional doors, V 9015 L Stacking, V 5030 MSL

High-Speed Doors

For optimised material flow and improved efficiency

HÖRMANN


Pickzone 1

	Hörmann Brand Quality	4
	Sustainable production	6
Spiral doors and speed sectional doors		8
HS 7030 PU	Spiral door with spiral bracket	10
HS 5015 PU N	Speed sectional door with normal track application ***NEW***	11
HS 5015 PU H	Speed sectional door with high-lift track application ***NEW***	12
HS 6015 PU V	Speed sectional door with vertical track application ***NEW***	13
Flexible high-speed doors		14
V 4015 SEL R	Tubular drive with emergency opening	17
V 5015 SEL	With SoftEdge and anti-crash	18
V 5030 SEL	With SoftEdge and anti-crash	19
V 6030 SEL	With SoftEdge and anti-crash	20
V 6020 TRL	Fully transparent	21
V 9015 L Stacking	Folding curtain with tensioning system ***NEW***	22
V 10008	Large door	23
Flexible high-speed doors for special applications		
V 5030 MSL	Personal and machine safety ***NEW***	24
V 3015 RW	Rescue routes	25
ISO Speed Cold	Deep freeze logistics	26
V 4015 ISO L	Fresh and cold logistics	27
V 2515 Food L	Food industry	28
V 2012	Supermarkets	29
V 1401 ATEX	Explosion-proof	30
V 3015 CLEAN	Clean rooms	31
V 3009	Conveyor systems	32
H 3530	Horizontal door	33
	Standard equipment	34
	Controls, accessories	35
	Overview of door types	38
	Hörmann product range	46

Left: Loewe Logistics & Care, Herford

Hörmann brand quality

Reliable and oriented towards the future

High-speed progress

Without on-going development and improvements by our highly-qualified technicians as well as comprehensive knowledge of all the market requirements, efficient high-speed door designs of a recognised high standard would not be possible.
The best examples are the new speed sectional doors.

Precise production

Innovative production processes that have been matched perfectly with each other are a guarantee for steadily increasing product quality. An example: The modern hot air welding system that enables a precise and automated welding of the door curtains.

As Europe's leading manufacturer of doors, hinged doors, frames and operators, we are committed to high product and service quality. This is how we set standards on an international scale.

Highly-specialised factories develop and manufacture construction components that are characterised by excellent quality, functional safety and a long service life.

Our presence in the global economy's key regions makes us a strong, future-oriented partner for industrial and public construction projects.

TESTED AND CERTIFIED

Certified safety
Hörmann high-speed doors are manufactured in line with stringent European standards and are certified as well.

10 YEAR GUARANTEED AVAILABILITY

It goes without saying that spare parts for doors, operators and controls are original Hörmann parts that come with a guaranteed availability of 10 years.

Competent advice

Experienced specialists within our customer-oriented sales organisation accompany you from the planning stage, through technical clarification up to the final building inspection. Complete working documentation is not only available in printed form but is always accessible and up-to-date at **www.hoermann.com**.

Efficient service

Our extensive service network means that we are never far away. This is a major advantage in terms of inspections, maintenance and repairs.

Sustainable production

For future-oriented construction

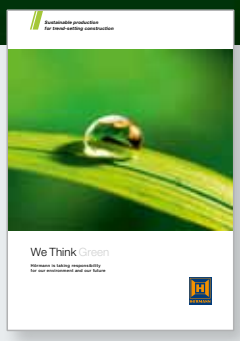

Find out more about Hörmann's environmental activities in the "We think green" brochure.

Only from Hörmann

Sustainably produced: Hörmann's high-speed doors

Ecological quality
A comprehensive energy management system ensures environmentally-friendly production.

Economic quality
The use of high-quality materials and innovative technologies such as the FU controls as standard results in long service life and low maintenance costs.

Functional quality
High-speed doors are used both inside and as exterior doors to optimise the flow of traffic, improve indoor climate and save energy.

Process quality
The further use of single-origin metal and UPVC scraps from the production process saves material resources.

Sustainability verified and documented by the IFT in Rosenheim

Hörmann is the only manufacturer who already received confirmation of the sustainability of all its high-speed doors through an environmental product declaration (EPD) in accordance with DIN ISO 14025 and prEN 15804 from the Institut für Fenstertechnik (ift – Institute of window technology) in Rosenheim. The inspection was based on the Product Category Rules (PCR) "Doors and Gates". Environmentally-friendly production was confirmed by a life-cycle analysis in accordance with DIN EN 14040 / 14044 for all high-speed doors.

Sustainable construction with Hörmann competence

Hörmann has already been able to gain great expertise in sustainable construction through various projects. We also apply this know-how to support your projects.

References for sustainable construction with Hörmann

ThyssenKrupp, Essen

dm logistics centre, Weilerswist

Immogate logistics centre, Munich

Nordex-Forum, Hamburg

Unilever Hafen-City, Hamburg

Deutsche Börse, Eschborn

Opernturm, Frankfurt

Skyline-Tower, Munich

Prologis Pineham Sites, Sainsbury

DGNB Deutsche Gesellschaft für Nachhaltiges Bauen e.V. German Sustainable Building Council

Institut Bauen und Umwelt e.V.

breeam

Spiral doors and speed sectional doors

Fast external doors with PU insulating panels for high thermal insulation

Figure: spiral door HS 7030 PU

These doors are characterised by their high thermal insulation, fast opening speed and light grilles as standard. The hot-galvanized, double-skinned sections with an elegant Micrograin surface finish are guided into a spiral or into tracks without contact, depending on the version.

Innovative technology and design

In every detail

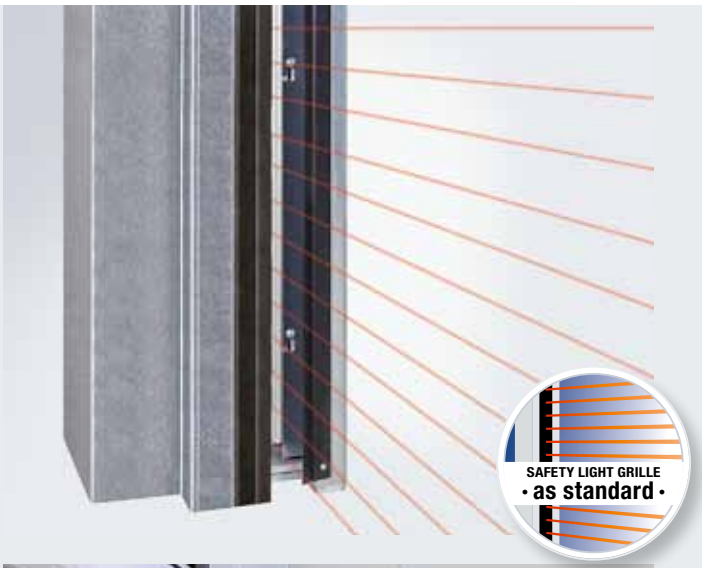

Non-contact safety

The safety light grille integrated in the frame monitors the closing zone of the door up to a height of 2500 mm. This does away with the need for additional installations on the door (e.g. closing edge safety device, photocell). Profit from this high level of safety with a high-speed door that is exceptionally easy to fit and service.

Long service life and high efficiency as standard

The standard frequency converter control takes stress off the entire door mechanism, guaranteeing nearly wear-free, quiet door travel. The opening and closing speeds optimise your operations and reduce heat losses. In addition, it relieves the entire door mechanism through the smooth starting and braking action which considerably extends the service life of the door.

Uniformly foamed steel sections

The hot-galvanized, double-skinned sections with PU rigid foam infill provide for particularly high thermal insulation resulting in a U_D value of 1.95 W/(m²·K)*. The doors are supplied as standard in White aluminium (RAL 9006). The exterior is characterised by the fine Micrograin lines, on the interior the sections are Stucco-textured.

External view
with Micrograin surface finish

External view
of glazing

Optional glazing

26-mm-thick DURATEC double glazing guarantees maximum scratch resistance and excellent thermal insulation values. An aluminium rail construction in natural finish E6 / EV 1 divides the glazing using stabilising intermediate spacers. DURATEC triple glazing is also available on request for even better thermal insulation.

* For 25 m² door surface

Spiral door HS 7030 PU

With non-contact roll-up technology

A compact spiral guide
The sections are securely guided into a spiral bracket without any contact. With the high-performance 3-phase frequency converter control (FU) and the chain mechanism with spring compensation, the door reaches an opening speed of up to 2.5 m/s. Spiral door HS 7030 PU can also be fitted externally.

External door / internal door	**HS 7030 PU**
Size range	
Max. width (LDB)	6500 mm
Max. height (LDH)	6000 mm
Speed	
With standard FU control AS 500 FU E	
Max. opening speed	1.5 – 2.5 m/s
Max. closing speed	0.5 m/s
Emergency opening / emergency closing	
BK 150 FU E USV, 230 V (up to approx. 9 m² door surface)	
Hand chain with spring compensation	
Door leaf	
Material	Steel sandwich construction, PU-foamed, DURATEC glazing optional
Depth	42 mm
Section height	225 mm
Hinge connections from approx. 3500 mm door width	
Resistance to wind load (EN 12424)	
	Class 4, max. 133 km/h
Acoustic insulation (EN 717-1)	
(Without glazing)	R = 26 dB
Thermal insulation (EN 12428)	
For 25 m² door size	U_D = 1.95 W/(m²·K)
Door leaf colours**	
Available in over 200 colours based on RAL.	

** With the exception of pearl-effect, fluorescent and metallic colours. Dark colours should not be used for doors that are exposed to the sun, as possible section deflection may restrict the door's function.

High-speed sectional door HS 5015 PU N

With normal track application

NEW

The space-saving track application
For tight spaces in the lintel area, we recommend track application N. A chain mechanism with spring compensation runs the sections into horizontal tracks. This requires a low headroom of 480 mm.

External door / internal door	HS 5015 PU N
Size range	
Max. width (LDB)	5000 mm
Max. height (LDH)	5000 mm
Speed	
With standard FU control AS 500 FU E	
Max. opening speed	1.5 m/s
Max. closing speed	0.5 m/s
Emergency opening / emergency closing	
BK 150 FU E USV, 230 V (up to approx. 9 m² door surface on request)	
Hand chain with spring compensation	
Door leaf	
Material	Steel sandwich construction, PU-foamed, DURATEC glazing optional
Depth	42 mm
Section height	225 mm
Hinge connections from approx. 3500 mm door width	
Resistance to wind load (EN 12424)	
	Class 4, max. 133 km/h
Acoustic insulation (EN 717-1)	
(Without glazing)	R = 26 dB
Thermal insulation (EN 12428)	
For 25 m² door size	U_D = 1.95 W/(m²·K)
Door leaf colours**	
Available in over 200 colours based on RAL.	

** With the exception of pearl-effect, fluorescent and metallic colours. Dark colours should not be used for doors that are exposed to the sun, as possible section deflection may restrict the door's function.

Speed sectional door HS 5015 PU H

With high-lift track application

NEW

The adjustable track application
The sections are guided in horizontal tracks and can be diverted flexibly depending on the fitting situation. Thus, the door can be fitted behind or above supply lines and crane tracks. Thanks to the belt mechanism with counter weights, the door is especially low-wear and long-lasting thanks to the belt mechanism.

External door / internal door	**HS 5015 PU H**
Size range	
Max. width (LDB)	5000 mm
Max. height (LDH)	6000 mm
Speed	
With standard FU control AS 500 FU E	
Max. opening speed	1.5 m/s
Max. closing speed	0.5 m/s
Emergency opening / emergency closing	
BK 150 FU E USV, 230 V (on request)	
Hand chain with counterbalance	
Door leaf	
Material	Steel sandwich construction, PU-foamed, optionally with DURATEC glazing
Depth	42 mm
Section height	225 mm
Hinge connections from approx. 3500 mm door width	
Resistance to wind load (EN 12424)	
	Class 4, max. 133 km/h
Acoustic insulation (EN 717-1)	
(Without glazing)	R = 26 dB
Thermal insulation (EN 12428)	
For 25 m² door size	U_D = 1.95 W/(m²·K)
Door leaf colours**	
Available in over 200 colours based on RAL.	

** With the exception of pearl-effect, fluorescent and metallic colours. Dark colours should not be used for doors that are exposed to the sun, as possible section deflection may restrict the door's function.

Speed sectional door HS 6015 PU V

With vertical track application

NEW

Dependable with minimum wear
The sections run vertically on the wall of the hall, ensuring that the door cycles are very quiet and wear-free. The belt mechanism with counter weights guarantees a long service life with constant use.

External door / internal door	HS 6015 PU V
Size range	
Max. width (LDB)	6500 mm
Max. height (LDH)	6000 mm
Speed	
With standard FU control AS 500 FU E	
Max. opening speed	1.5 m/s
Max. closing speed	0.5 m/s
Emergency opening / emergency closing	
BK 150 FU E USV, 230 V (up to approx. 20 m² door size)	
Hand chain with counterbalance	
Door leaf	
Material	Steel sandwich construction, PU-foamed, DURATEC glazing optional
Depth	42 mm
Section height	225 mm
Hinge connections from approx. 3500 mm door width	
Resistance to wind load (EN 12424)	Class 4, max. 133 km/h
Acoustic insulation (EN 717-1)	R = 26 dB
Thermal insulation (EN 12428) For 25 m² door size	U_D = 1.95 W/(m²·K)
Door leaf colours** Available in over 200 colours based on RAL.	

** With the exception of pearl-effect, fluorescent and metallic colours. Dark colours should not be used for doors that are exposed to the sun, as possible section deflection may restrict the door's function.

Flexible high-speed doors

To improve indoor climate and optimise the flow of traffic

Flexible high-speed doors from Hörmann have been designed for safe, efficient and lasting operation. A standard light grille does away with the need for additional installations, such as a closing edge safety device, making the door particularly easy to fit and service.

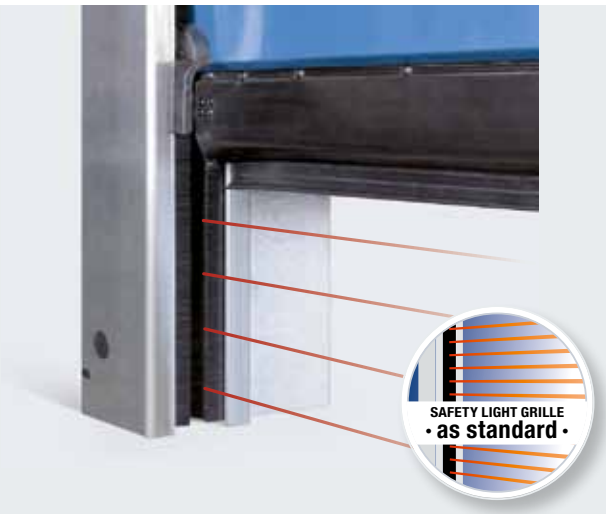

Non-contact safety

The standard safety light grille (IP 67) monitors the closing zone of the door up to a height of 2500 mm. A closing edge safety device is not required. Fitting in the frame also reduces the risk of collision damage. These advantages are what makes Hörmann high-speed doors especially easy to service and fit.

Impulses for a longer service life and increased efficiency

At Hörmann, you receive all high-speed doors with a frequency converter control (FU) as standard – for fast, safe and low-wear door travel. High opening and closing speeds help you to optimise your operations and reduce heat losses and draughts at the workplace. In addition, it relieves the entire door mechanism through the smooth starting and braking action which considerably extends the service life of the door.

No downtimes resulting from a crash thanks to the SoftEdge bottom profile

The innovative SoftEdge door technology prevents damage and resulting downtimes of the door system. Extensive repairs, such as those with rigid bottom profiles, do not become necessary. SoftEdge ensures trouble-free operation and production processes.

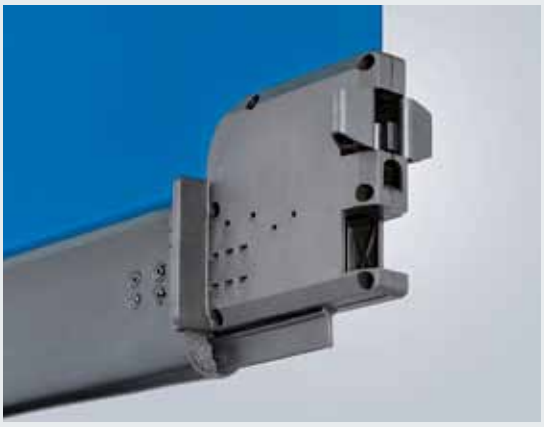

SoftEdge bottom profile
with integrated radio crash switch

Radio crash switch

The radio crash switch is concealed in the SoftEdge bottom profile. If the bottom profile is pushed out of the side guides by a crash, the radio crash switch transmits a signal to the control and the **door is stopped immediately,** fulfilling the requirements of DIN EN 13241-1.

High-speed doors

As internal and external doors

V 4015 SEL R

Internal door with SoftEdge and tubular drive

SAFETY LIGHT GRILLE
• as standard •

For logistics areas and supermarkets
Storage shelves often do not permit a gearbox that protrudes on the side. Here, the high-speed door V 4015 SEL R with the tubular drive integrated in the door shaft is an optimum solution.

Fully equipped
The fast and quiet running of the door due to the standard frequency converter (FU) control, the safety light grille and the increased personal safety that results from the vertically flexible SoftEdge bottom profile with manual insertion make the door a safe internal door for areas with little space.

The shaft cover that is limited to the construction width is available in a galvanized version and, on request, in a powder-coated version based on RAL.

Fitted quickly and simply
To enable a quick fitting, the door shaft is already assembled with the tubular drive at the factory.

Standard shaft cover with standard emergency crank handle.

Internal door	V 4015 SEL R
Size range	
Max. width (LDB)	4000 mm
Max. height (LDH)	4000 mm
Speed	
With standard FU control BK 150 FU E H	
Max. opening speed	1.5 m/s
Max. closing speed	0.8 m/s
Emergency opening	
Crank handle Optional: Automatic door opening via UPS in case of power failure (BK 150 FU E H UPS, 230 V)	
Curtain	
Spring steel in curtain pockets or aluminium profile (from 2500 mm door width)	
Fabric thickness	1.5 mm
Vision panel thickness	2.0 mm
Curtain colours	
RAL 1018 Zinc yellow RAL 2004 Pure orange RAL 3002 Carmine red RAL 5010 Gentian blue RAL 7038 Agate grey	

NEW
Emergency opening with crank handle

V 5015 SEL

Internal door with SoftEdge and anti-crash

Especially economical
The inexpensive high-speed door for inside, with SoftEdge bottom profile and standard FU control for safe and gentle continual operation.

The curtain stability of the door type V 5015 SEL is achieved through proven aluminium profiles and a horizontally stable SoftEdge bottom profile at the lower edge.

Aluminium profiles
In case of repair, the inexpensive curtain stabilization allows the curtain segments to be replaced quickly and easily.

Curtain stability
with aluminium profiles

Internal door	V 5015 SEL
Size range	
Max. width (LDB)	5000 mm
Max. height (LDH)	5000 mm
Speed	
With standard FU control BK 150 FU E H	
Max. opening speed	1.5 m/s
Max. closing speed	0.8 m/s
Emergency opening	
Crank handle Optional: Automatic door opening via UPS in case of power failure (BK 150 FU E H UPS, 230 V)	
Curtain	
With aluminium profile	
Fabric thickness	1.5 mm
Vision panel thickness	2.0 mm
Curtain colours	
RAL 1018 Zinc yellow RAL 2004 Pure orange RAL 3002 Carmine red RAL 5010 Gentian blue RAL 7038 Agate grey	

V 5030 SEL

Internal door with SoftEdge and anti-crash

Quiet and fast
In areas with a low noise level, a door should cause little noise, too, and work quickly and reliably even with strong draughts.

This is why the V 5030 SEL door type is equipped with spring steel wind locks that provide the necessary curtain stability.

Speeds of up to 3 m/s are achieved with the optional Hörmann AS 500 FU E control.

Spring steel wind locks
Integrated in a curtain pocket, with lateral twin rollers, ensures quiet door travel and allows for higher wind loads.

You can also optionally obtain the V 5030 SEL with aluminium bottom profile for wind class 1 (DIN EN 12424).

Spring steel wind lock

Internal door	V 5030 SEL
Size range	
Max. width (LDB)	5000 mm
Max. height (LDH)	5000 mm
Speed	
With standard FU control BK 150 FU E H	
Max. opening speed	2.0 m/s
Max. closing speed	0.8 m/s
Optional control AS 500 FU E	
Max. opening speed	3.0 m/s
Max. closing speed	0.8 m/s
Emergency opening	
Crank handle Optional: Automatic door opening via UPS in case of power failure (BK 150 FU E H UPS, 230 V)	
Curtain	
Spring steel wind lock with lateral twin rollers	
Fabric thickness	1.5 mm
Vision panel thickness	2.0 mm
Resistance to wind load (EN 12424)	
With aluminium bottom profile	Class 1, max. 88 km/h
Curtain colours	
RAL 1018 Zinc yellow RAL 2004 Pure orange RAL 3002 Carmine red RAL 5010 Gentian blue RAL 7038 Agate grey	

V 6030 SEL

Internal and external door with SoftEdge and anti-crash

For highly-frequented transport routes, with crash-protection
External doors are driven into, e.g. by forklifts, more frequently than internal doors. This is where crash-protection pays off because it significantly reduces downtimes and repair costs.

And the high speeds at which the door opens and closes also save on energy costs.

Spring steel wind lock in curtain pocket
The lateral twin rollers ensure quiet door travel and allow reliable stops. Even wind loads of up to 100 km/h do not pose problems thanks to the spring steel wind protectors.

You can also optionally obtain the V 6030 SEL with aluminium bottom profile.

Spring steel wind lock

The tensioning system tensions the door curtain for reliable door travel.

Internal door / external door	V 6030 SEL
Size range	
Max. width (LDB)	5000 mm
Max. height (LDH)	6000 mm
Speed	
With standard FU control BK 150 FU E H	
Max. opening speed	2.0 m/s
Max. closing speed	0.8 m/s
Optional control AS 500 FU E	
Max. opening speed	3.0 m/s
Max. closing speed	0.8 m/s
Emergency opening	
Crank handle Optional: Automatic door opening via UPS in case of power failure (BK 150 FU E H UPS, 230 V), counter weights with back-up battery	
Curtain	
Spring steel wind lock with lateral twin rollers and tensioning system	
Fabric thickness	1.5 mm
Vision panel thickness	2.0 mm
Resistance to wind load (EN 12424)	Class 2, max. 100 km/h
Curtain colours	
RAL 1018 Zinc yellow	
RAL 2004 Pure orange	
RAL 3002 Carmine red	
RAL 5010 Gentian blue	
RAL 7038 Agate grey	

V 6020 TRL

Internal and external doors with transparent curtain

SAFETY LIGHT GRILLE
• as standard •

Fully transparent for more light
The fully transparent high-speed door V 6020 TRL is suitable for high ingress of light as an external door but also for an improved view in internal areas. The 4-mm-thick transparent curtain lets light into the room resulting in a pleasantly bright workplace.

If used as an external door, we recommend the heavy, partially transparent version.

See what's coming at you
Transport routes become safer through unimpeded visual contact. Fully transparent curtains are available in sizes up to 25 m²; from 25 m² only fabric curtains with an optional vision field.

Wind lock
In addition to the tensioning system fitted as standard, spring steel wind locks ensure the necessary curtain stability.

Transparent for more incidence of light and unimpeded visual contact

Aluminium bottom profile for more stability

Internal door / external door	V 6020 TRL
Size range	
Max. width (LDB)	6000 mm
Max. height (LDH)	7000 mm
Speed	
With standard FU control BK 150 FU E H (up to approx. 12.25 m² door size)	
Max. opening speed	1.5 m/s
Max. closing speed	0.5 m/s
Optional FU control AS 500 FU E (from approx. 12.25 m² door size as standard)	
Max. opening speed	2.0 m/s
Max. closing speed	0.5 m/s
Emergency opening	
Crank handle Optional: Automatic door opening via UPS in case of power failure (BK 150 FU E H UPS, 230 V) (up to approx. 12.25 m² door size)	
Curtain	
Spring steel wind lock with lateral twin rollers and tensioning system	
Fully transparent curtain thickness	4.0 mm
Fabric thickness	2.4 mm (from 25 m² door size)
Resistance to wind load (EN 12424)	Class 3, max. 115 km/h
Wind lock strip colours	
RAL 1018 Zinc yellow RAL 2004 Pure orange (optional fabric colour) RAL 3002 Carmine red RAL 5010 Gentian blue (optional fabric colour) RAL 7038 Agate grey (optional fabric colour)	

V 9015 L Stacking

Internal and external door for large openings

NEW

Folding curtain with belt system
The curtain is opened via a belt system with wind reinforcement laths and folded in the lintel area. The high-quality aluminium profiles are arranged vertically, at distances of 600 mm along the entire door height.
As standard, a 600 mm vision panel is integrated into the curtain over the entire door width. On request, additional sections can be transparent.

Ideal for external fitting
The V 9015 L Stacking was designed especially for high door openings in halls with little lintel space, since the door can also be fitted outside on the hall. The operator technology is safely protected in the frame and shaft cover. The control can optionally be operated simply and conveniently from the floor via an external control element integrated into the frame.

Integrated operator technology

Aluminium profiles stabilising the curtain

Internal door / external door	V 9015 L Stacking
Size range	
Max. width (LDB)	9000 mm
Max. height (LDH)	6000 mm
Speed	
Relay control unit AK E as standard	
Max. opening speed	0.7 m/s
Max. closing speed	0.7 m/s
With optional FU control BK 150 FU E H	
Max. opening speed	1.5 m/s
Max. closing speed	0.7 m/s
Emergency opening	
Emergency hand chain	
Curtain	
With aluminium profiles	
Fabric thickness	0.9 mm
Vision panel thickness	2.0 mm
Resistance to wind load (EN 12424)	
Door width up to 6000 mm	Class 3, max. 115 km/h
Door width over 6000 mm	Class 2, max. 100 km/h
Curtain colours	
RAL 1018 Zinc yellow	
RAL 2004 Pure orange	
RAL 3002 Carmine red	
RAL 5010 Gentian blue	
RAL 7038 Agate grey	

V 10008

External door for especially large openings

For oversized openings
Double lashing straps and especially wide side guides ensure safe door travel even with a high door curtain weight. The standard FU control and double closing edges on the bottom profile ensure that the closing force is maintained and provide the door with its required safety.

Spring steel wind lock in curtain pocket
The lateral twin rollers ensure quiet door travel and allow for higher wind loads. The number of wind locks is determined by the door size, wind load requirements and the fitting situation.

Spring steel wind lock

Especially wide side guide

External door	V 10008
Size range	
Max. width (LDB)	10000 mm
Max. height (LDH)	6250 mm
Speed	
With standard FU control AS 500 FU E (door width up to 6000 mm)	
Max. opening speed	1.5 m/s
Max. closing speed	0.5 m/s
(door width from 6000 mm)	
Max. opening speed	0.8 m/s
Max. closing speed	0.4 m/s
Emergency opening	
Emergency hand chain	
Curtain	
Spring steel wind lock with lateral twin rollers and tensioning system	
Fabric thickness	1.5 mm
Vision panel thickness	2.0 mm
Resistance to wind load (EN 12424)	
Door width up to 6000 mm	Class 3, max. 115 km/h
Door width over 6000 mm	Class 2, max. 100 km/h
Curtain colours	
RAL 1018 Zinc yellow	
RAL 2004 Pure orange	
RAL 3002 Carmine red	
RAL 5010 Gentian blue	
RAL 7038 Agate grey	

V 5030 MSL

Internal door for protecting people and machines

NEW

Safety for people and machines
The requirements for work safety and modern manufacturing processes are constantly increasing. Reliable production processes with short downtimes, simple access for operation and maintenance of the manufacturing machines and of course the safety of the employees are all important.

Secure monitoring and quick access
The flexible high-speed door with machine protection function fulfils all of these requirements. It protects operating personnel thanks to a monitored complete partitioning of the machine and provides fast access when needed. Safety sensors in the aluminium bottom profile and in the frame reliably transmit the door position to the system control (performance level d). The door can thus open only when the machine is idle and the machine can be operated only when the door is closed.

Safety sensors transmit the door position

Internal door	V 5030 MSL
Size range	
Max. width (LDB)	4000 mm
Max. height (LDH)	4000 mm
Speed	
With standard FU control BK 150 FU E H	
Max. opening speed	1.5 m/s
Max. closing speed	0.8 m/s
Emergency opening	
Crank handle Optional: Automatic door opening via UPS in case of power failure (BK 150 FU E H UPS, 230 V)	
Curtain	
With spring steel wind lock	
Fabric thickness	1.5 mm
Vision panel thickness	2.0 mm
Curtain colours	
RAL 1018 Zinc yellow RAL 2004 Pure orange RAL 3002 Carmine red RAL 5010 Gentian blue RAL 7038 Agate grey	

V 3015 RW

Internal door with SoftEdge for rescue routes

The internal door for rescue routes with decisive advantages
Thanks to a SoftEdge profile with anti-crash system, these high-speed doors are especially safe and economical. People are better protected and damage and downtimes are avoided.

Recommended for use in rescue routes
With certified qualification and official approval for individual cases, these high-speed doors can be integrated into rescue route planning.

Standard equipment
Radar detector for advanced protection in the escape direction, emergency open button.

Radar detector in escape direction as standard

Internal door	V 3015 RW
Size range	
Max. width (LDB)	3000 mm
Max. height (LDH)	3000 mm
Speed	
With standard FU control BS 150 FU E	
Max. opening speed	1.5 m/s
Max. closing speed	0.8 m/s
Anti-crash system	
With automatic re-feed on both sides	
Emergency opening	
Counter weight with operating current brake	
Curtain	
With aluminium profile	
Fabric thickness	1.5 mm
Vision panel thickness	2.0 mm
Curtain colours	
RAL 1018 Zinc yellow	
RAL 2004 Pure orange	
RAL 3002 Carmine red	
RAL 5010 Gentian blue	
RAL 7038 Agate grey	

ISO Speed Cold

Fast energy-saving cold store and deep freeze door

Fitting in cold stores with track application V

Fast, airtight and extremely efficient
Thanks to its sections with thermal break and special seals for the building structure and floor, the ISO Speed Cold is the optimum solution for all areas with high temperature differences. Used as a high-speed door in cold-storage areas or to save energy in production and distribution areas, the ISO Speed Cold remains impervious.

With thermal breaks
The steel sections in the ISO Speed Cold have thermal breaks separating the interior from the exterior. Additional lintel and bottom seals help to achieve an excellent thermal insulation value of $U_T = 0.3$ W/(m²·K).

Exceptionally airtight
The double-skinned door leaf is infilled with polyurethane rigid foam (PU). Thus it is exceptionally stable and attains exceptional insulation values in conjunction with the all-round sealing frame.

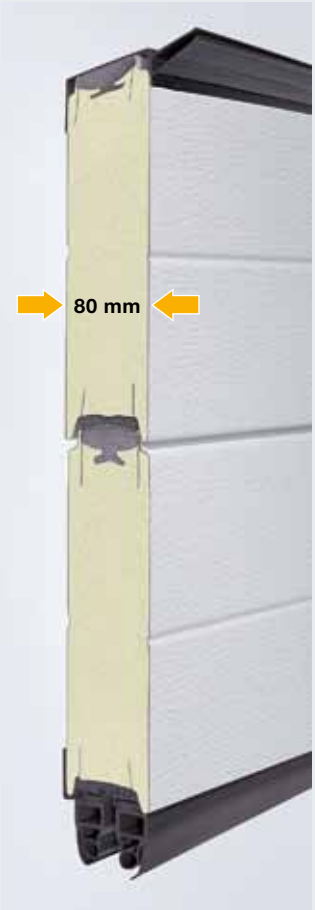

Sections with thermal break

Internal door	**ISO Speed Cold**	
Size range		
	Outside (cold store)	Inside (freezer)
Max. width (LDB)	5000 mm	4000 mm
Max. height (LDH)	5000 mm	4000 mm
Speed		
With standard FU control	AS 500 FU E	
Max. opening speed	2.0 m/s	
Max. closing speed	0.5 m/s	
Panel		
Foamed with polyurethane		
Thickness	80 mm	
Emergency opening		
Counter weight		
Emergency hand chain		
Thermal insulation (EN 12424)		
For 25 m² door size	$U_T = 0.3$ W/(m²·K)	
Track applications		
Track application V for fitting within and outside of freezer		
High-lift track application only for fitting outside of freezer		

V 4015 ISO L

Internal door for fresh and cold logistics up to 5°C

SAFETY LIGHT GRILLE
• as standard •

For cold and fresh foods with insulated curtain for good thermal values
The energy-saving door in internal areas for cold and fresh logistics.

A thermal insulation value of $U_T = 1.2$ W/(m²·K) is achieved.

Wind lock

20-mm-thick insulated curtain

Internal door	V 4015 ISO L
Size range	
Max. width (LDB)	4000 mm
Max. height (LDH)	4500 mm
Speed	
With standard FU control BK 150 FU E H	
Max. opening speed	1.5 m/s
Max. closing speed	0.5 m/s
Emergency opening	
Crank handle Optional: Automatic door opening via UPS in case of power failure (BK 150 FU E H UPS, 230 V)	
Curtain	
PE foam	
Thickness	20 mm
Thermal insulation (EN 12424)	
For 25 m² door size	$U_T = 1.2$ W/(m²·K)

V 2515 Food L

Internal door for wet areas in the food industry

SAFETY LIGHT GRILLE
• as standard •

Easy to clean
The side guides in this special version are easy to clean. High-pressure cleaning systems and water are not a problem for the door construction, which is made entirely of stainless steel. No counter weights or springs complicate the cleaning of the frame.

Spray-water protected
The operator is completely enclosed in a splash-water protected operator cover made of V2 A stainless steel (protection category IP 65).

The safety light grille complies with protection category IP 67.

The door is supplied with an EPDM seal and safety light grille in the frame as standard.

Easy to clean

Internal door	V 2515 Food L
Size range	
Max. width (LDB)	2500 mm
Max. height (LDH)	3000 mm
Speed	
With standard FU control BS 150 FU E H V2 A	
Max. opening speed	1.2 m/s
Max. closing speed	0.5 m/s
Emergency opening	
Optional: Automatic door opening via UPS in case of power failure (BS 150 FU E H V2 A UPS, 230 V)	
Curtain	
With spring steel in curtain pockets	
Fabric thickness	1.5 mm
Vision panel thickness	2.0 mm
Curtain colours	
RAL 1018 Zinc yellow	
RAL 2004 Pure orange	
RAL 3002 Carmine red	
RAL 5010 Gentian blue	
RAL 7038 Agate grey	

V 2012

Internal door for supermarkets

The completely equipped door
Full equipment with operator and shaft cover, standard light grille and automatic emergency opening via a counter weight (in case of power failure) make this flexible plastic curtain door a safe choice for indoor areas with a high customer frequency.

Anti-crash system with automatic start-up
Thanks to a durable, light curtain and very flexible bottom part, this door is back in operation within seconds of a crash. This high level of flexibility does away with the need for a closing edge safety device.

FU control
With a standard FU control BK 150 FU E H the door achieves opening speeds of up to 1.2 m/sec.

Curtain variants
Anti-static fabric curtain, as standard without vision field. Available on request with an approx. 750 mm high vision panel from 1200 mm above FFL at no surcharge.

350-mm-high light grille concealed in the door guide

Internal door	V 2012
Size range	
Max. width (LDB)	2500 mm
Max. height (LDH)	2500 mm
Speed	
With standard FU control BK 150 FU E H	
Max. opening speed	1.2 m/s
Max. closing speed	0.5 m/s
Emergency opening	
Counter weight with operating current brake	
Curtain	
With spring steel in curtain pockets	
Fabric thickness	1.5 mm
Vision panel thickness	2.0 mm
Curtain colours	
RAL 1018 Zinc yellow	
RAL 2004 Pure orange	
RAL 3002 Carmine red	
RAL 5010 Gentian blue	
RAL 7038 Agate grey	

V 1401 ATEX

Internal door for explosive areas

V 1401 ATEX
The high-speed door for explosive areas. Developed, designed and certified in accordance with the following directives: EC Explosion Protection 94 / 9 / EC and DIN EN 13463-1.

The control cabinet must always be fitted outside the Ex area.

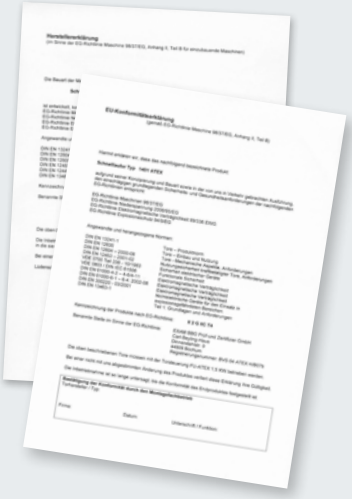

Internal door	V 1401 ATEX
Size range	
Max. width (LDB)	4000 mm
Max. height (LDH)	4000 mm
Speed	
With standard FU control BS 150 FU E	
Max. opening speed	1.5 m/s
Max. closing speed	0.8 m/s
Emergency opening	
Crank handle	
Curtain	
With aluminium profile	
Fabric thickness	1.5 mm
Vision panel thickness	2.0 mm
Curtain colours	
RAL 1018 Zinc yellow	
RAL 2004 Pure orange	
RAL 3002 Carmine red	
RAL 5010 Gentian blue	
RAL 7038 Agate grey	

V 3015 CLEAN

Internal door for clean rooms, transparent curtain

Special curtain for pressure differences
Air purification in clean rooms can result in a pressure difference of up to 50 Pa. The fully transparent curtain of this clean room door is tightly integrated in the special side guides. This minimizes air loss (leakage) and enables an optimum design for ventilation systems. A stainless steel cover on the shaft and operator, and welded-on spring steel stabilisation are further characteristics of this door.

Extremely leaktight and fully transparent

Curtain tightly integrated in the side guides

Internal door	V 3015 CLEAN
Size range	
Max. width (LDB)	2500 mm
Max. height (LDH)	3000 mm
Speed	
With standard FU control BS 150 FU E H V2 A	
Max. opening speed	1.5 m/s
Max. closing speed	0.5 m/s
Emergency opening	
Crank handle Optional: Automatic door opening via UPS in case of power failure (BS 150 FU E H V2 A UPS, 230 V)	
Curtain	
With spring steel in curtain pockets	
Fully transparent curtain thickness	4.0 mm
Wind lock strip colours	
RAL 1018 Zinc yellow RAL 2004 Pure orange RAL 3002 Carmine red RAL 5010 Gentian blue RAL 7038 Agate grey	

V 3009

Internal door for conveyor systems

Designed for continual operation
The V 3009 is fitted between the operating sections and the storage areas within the conveyor system and is used to save energy and reduce draughts and noise. The door is designed for a high number of automated opening and closing cycles.

The door control can be integrated in existing PLC systems. A volt-free contact reports the door position (open / closed) to the control.

A vision panel gives insight into the operating procedure

Internal door	V 3009 Conveyor
Size range	
Max. width (LDB)	3500 mm
Max. height (LDH)	3500 mm
Speed	
With standard control AK E (contactor)	
Max. opening speed	0.8 m/s
Max. closing speed	0.8 m/s
With optional FU control BK 150 FU E H	
Max. opening speed	1.2 m/s
Max. closing speed	0.5 m/s
Emergency opening	
Crank handle	
Curtain	
With aluminium profile	
Fabric thickness	1.5 mm
Vision panel thickness	2.0 mm
Curtain colours	
RAL 1018 Zinc yellow	
RAL 2004 Pure orange	
RAL 3002 Carmine red	
RAL 5010 Gentian blue	
RAL 7038 Agate grey	

H 3530

Fast horizontal door

Opens quickly,
crashes virtually excluded
Our quickest door for internal applications. The door leaves quickly open to the sides and immediately make the full passage height available. This guarantees fast traffic flow and increases safety, above all for personnel traffic. Despite the fast opening speed of 3 m/sec., soft start and stop are guaranteed by the frequency converter control, which reduces the door's wear.

Further benefits: Two opening widths can be programmed for personnel and vehicles. Closing edge safety devices and photocells provide additional safety. In the event of a malfunction, the door can quickly be opened with a hand pulley or automatically during a power failure by using an operating current brake (special equipment).

The entire operator technology is arranged on the right
in a space-saving manner in 3-sided cladding and only requires minimum headroom.

In the stainless steel version, the door fulfils the hygienic requirements of the food, chemical and pharmaceutical industries.

Internal door	H 3530
Size range	
Max. width (LDB)	3500 mm
Max. height (LDH)	3500 mm
Speed	
With standard FU control BK 150 FU E H	
Max. opening speed	3.0 m/s
Max. closing speed	1.0 m/s
Emergency opening	
Springs with pull cord	
Optional: Springs with operating current brake	
Curtain	
Fabric thickness	1.5 mm
Vision panel thickness	2.0 mm
Wind lock strip colours	
RAL 1018 Zinc yellow	
RAL 2004 Pure orange	
RAL 3002 Carmine red	
RAL 5010 Gentian blue	
RAL 7038 Agate grey	

Standard at Hörmann

Intelligent operator and control technology

Reliable thanks to innovative equipment

Hörmann high-speed doors are up to 20 times faster than conventional industrial doors. Which is why the intelligent operator and control technology is designed for reliable continuous operation. All operators and controls are equipped with plug-in terminals to allow the control circuit boards to be easily changed (control voltage 24 V DC).

Standard at Hörmann:

Frequency converter control

High performance frequency converter controls (FU) feature higher speeds and relieve the complete door mechanism which, in turn, extends the service life of the door considerably.

Door cycle counter

Operation time monitoring

Automatic timer (adjustable hold-open phase)

Error display / diagnosis via a 4x 7-segment display

Service operation setting

FU controls

BK 150 FU E H
FU control in plastic housing IP 54
single-phase, 230 V

Operation
Open-Stop-Close
membrane push button
4 × 7-segment display to provide information on door functions

Function
Automatic timer,
hold-open phase adjustable,
safety light grille,
closing edge safety device (H 3530),
stop / reopen

Impulse generator
Push button, pull switch,
mushroom button,
radar presence detector,
slots for induction loop detector
and remote control

Extension options
Main switch, traffic lights,
flashing warning light, locking,
intermediate stop,
extension PCB E FU H,
stainless steel cabinet IP 65

Wiring
Connecting lead 1~230 V, N, PE,
fuse 16 A, slow-acting,
plug-in connection between door operator and control cabinet, CEE plug, 3-pin with 1 m cable for on-site CEE socket, 16 A

Housing dimensions
200 × 400 × 200

Compatible door types
V 4015 SEL R
V 5015 SEL
V 5030 SEL (up to 2 m/s)
V 6030 SEL (up to 2 m/s)
V 6020 TRL (up to 12.25 m²)
V 5030 MLS
V 2012
V 4015 ISO L
H 3530
V 3009

AS 500 FU E
FU control in steel cabinet IP 54
three-phase, 400 V

Operation
Open-Stop-Close
membrane push button
Emergency-off button,
4 × 7-segment display
for information on door functions,
lockable main switch

Function
Automatic timer,
hold-open phase adjustable,
safety light grille,
closing edge safety device
(V 10008, ISO Speed Cold),
stop / reopen

Impulse generator
Push button, pull switch,
mushroom button,
radar presence detector,
slots for induction loop detector
and remote control

Extension options
Traffic lights, flashing warning light,
locking, intermediate stop,
extension PCB R FU X
stainless steel cabinet IP 65

Wiring
Connecting lead 3~400 V, N, PE,
fuse 20 A, slow-acting,
plug-in connection between door operator and control cabinet,
connecting lead cross section
5 × 2.5 mm² (depending
on national standards)

Housing dimensions
400 × 600 × 200

Compatible door types
HS 7030 PU
HS 5015 PU N
HS 5015 PU H
HS 6015 PU V
V 5030 SEL (up to 3 m/s)
V 6030 SEL (up to 3 m/s)
V 6020 TRL
V 10008
ISO Speed Cold

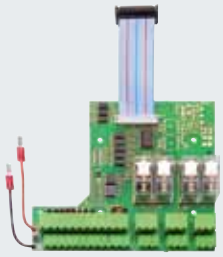

E FU H / R FU X
Extension PCB for controls:
BK 150 FU E H (E FU H)
AS 500 FU E (R FU X)

E FU H
Lock controller
6 additional switch outputs
(1 × 4, 2 × 1 volt-free)
6 additional digital inputs

R FU X
Lock controller,
4 additional switch outputs
(2 × 2 volt-free),
8 additional digital inputs

Accessories

Operating and controlling options

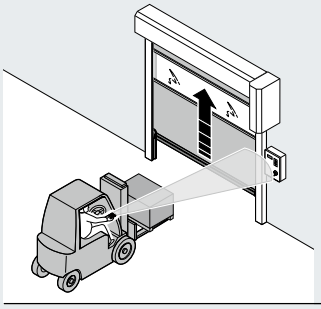

Radio remote controls

4-button hand transmitter HS 4

1-button hand transmitter HS 1

Hand transmitter HSI
For up to 999 doors
With large, clear display

Receiver HER 1 (1-channel)
with volt-free relay output
in a separate housing
without connecting lead
or **as a plug-in circuit board in the control cabinet**

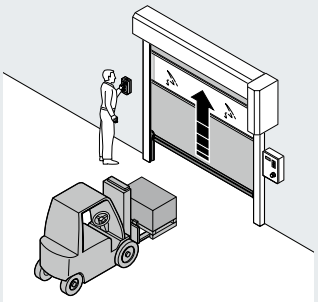

Manually operated impulse generators

Push button
2 ×
“Open / Close”
Plastic housing IP 65

Push button
3 ×
“Open / Emergency-off / Close”
Plastic housing IP 65

Mushroom button
With large operating surface
Plastic housing IP 65

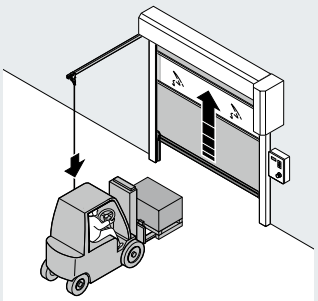

Manually operated impulse generators

Pull switch with plastic pull cord
Horizontal or vertical fitting possible, aluminium die-cast housing IP 65, cord length 4 m

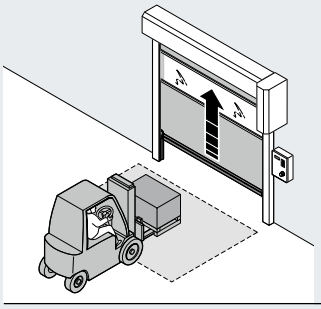

Induction loops

Induction loop detector
1 or 2-channel plug-in print suitable for two separate induction loops, supplied without loop cable

To operate an efficient door system, it is important to choose the right impulse generator. You should therefore consult your Hörmann specialist adviser.

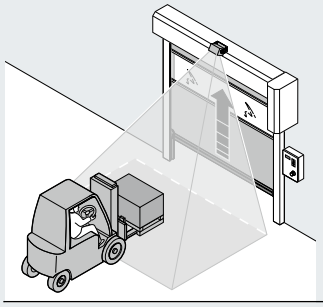

Remote controls

Radar / presence detector Comfort
Radar movement and presence detection with infrared detection, fast and targeted automatic door opening, reliable advance protection, up to a height of max. 6 m, in areas with high levels of humidity and in outside areas, only the radar function is available, housing: protection category IP 65

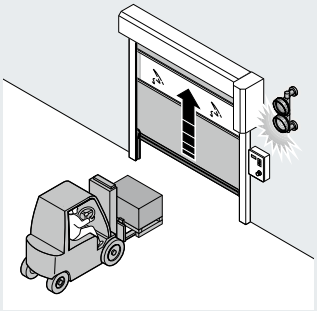

Safety equipment

Warning light
Ø 150 mm
Red,
in plastic housing
with mounting strap,
IP 65

Warning light
Ø 150 mm
Red, green,
in plastic housing,
with fitting support,
IP 65

Rotating
warning light
Red or yellow,
in plastic housing,
IP 54

Flashing
warning light
Orange,
in plastic housing,
IP 65

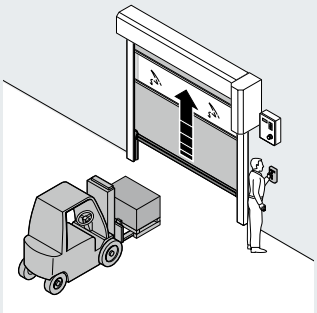

Control elements

External control element for FUE H ***NEW*** from June 2013
For easy operation and programming, can be placed independent from the control, same control buttons as on the control as well as 4 × 7-segment display

Overview of door types

Construction and quality features

Use	Internal door	
	External door	
Speed	FU control (3-phase)	Max. opening speed approx. m/s
	FU control (1-phase)	Max. opening speed approx. m/s
		Max. closing speed approx. m/s
Security features	DIN EN 13241.1	
Resistance to wind load	DIN EN 12424	
Resistance to water penetration	DIN EN 12425	
Air permeability	DIN EN 12426	
Transmission of heat	DIN EN 12428	
Acoustic insulation	DIN EN 52210 dB	
Door sizes	Max. width LDB	
	Max. height LDH	
For fitting dimensions (space requirement) see the Technical Manual		
Door construction	Self-supporting	
Door leaf counterbalance	Supporting	
Door leaf	Double-skinned section thickness	
	Foamed door leaf	
Door leaf material / surface	Steel, RAL 9006	
	Wet coating in RAL to choose	
	Aluminium rail window, anodised aluminium E6 / EV 1	
Glazing	Double synthetic panes	
	Triple synthetic panes	
Ventilation grille	Ventilation cross section dependent on size / version (at least 30 %)	
Operator and control	Frequency converter control	
	Connecting voltage	3-phase
		1-phase
	Open-Stop-Close button	
	Main switch, all-pole switch-off (1-phase / 3-phase)	
	Fuse protection	3-phase
		1-phase
	Protection category for operator and control	
	Emergency-OFF button	3-phase
		1-phase
	Closing edge safety device with energy chain	
	Closing zone monitoring	Safety light grille IP 67
	External route monitoring	Photocell
		Light grille
	Door area monitoring	Radar presence detector
		Induction loop
	Hold-open phase in sec.	
	Electronic limit switch DES	
Emergency opening	Crank handle	
	Hand chain	
	Counter weight / spring	
	UPS in plastic cabinet (200 × 400 × 200) for FU control 230 V, 1-phase (on request)	
Volt-free contacts / impulse generator / safety devices		

Spiral Door	High-speed sectional doors		
HS 7030 PU	**HS 5015 PU N**	**HS 5015 PU H**	**HS 6015 PU V**
●	●	●	●
●	●	●	●
2.5	1.5	1.5	1.5
2.5	1.5	1.5	1.5
0.5	0.5	0.5	0.5
●	●	●	●
Class 4	Class 4	Class 4	Class 4
Class 3	Class 3	Class 3	Class 3
Class 0	Class 0	Class 0	Class 0
1.95 W/(m²·K)	1.95 W/(m²·K)	1.95 W/(m²·K)	1.95 W/(m²·K)
26	26	26	26
6500	5000	5000	6500
6000	5000	6000	6000
–	–	–	–
●	●	●	●
42	42	42	42
●	●	●	●
●	●	●	●
○	○	○	○
●	●	●	●
●	●	●	●
○	○	○	○
○	○	○	○
●	●	●	●
3 – 400 V, N, PE	3 – 400 V, N, PE	3 – 400 V, N, PE	3 – 400 V, N, PE
1 – 230 V, N, PE	1 – 230 V, N, PE	1 – 230 V, N, PE	1 – 230 V, N, PE
●	●	●	●
●	●	●	●
20 A, slow-acting	20 A, slow-acting	20 A, slow-acting	20 A, slow-acting
16 A, slow-acting	16 A, slow-acting	16 A, slow-acting	16 A, slow-acting
IP 54	IP 54	IP 54	IP 54
●	●	●	●
○	○	○	○
–	–	–	–
●	●	●	●
–	–	–	–
○	○	○	○
○	○	○	○
○	○	○	○
1 – 200	1 – 200	1 – 200	1 – 200
●	●	●	●
–	–	–	–
●	●	●	●
– / –	– / –	– / –	– / –
–	–	–	–
○ / ○ / ○	○ / ○ / ○	○ / ○ / ○	○ / ○ / ○

● = Standard
○ = Optional

Ckt. = Characteristic
WS = Wind lock

1) = optional aluminium bottom profile
2) = not all dimensions are possible yet

Overview of door types

Construction and quality features

Use	Internal door	
	External door	
Speed	FU control (3-phase) LDB > 6000 mm	Max. opening speed, approx. m/s
	FU control (1-phase) max. LDB × LDH (6000 × 6000 mm)	Max. opening speed, approx. m/s
	Contactor control (3-phase)	Max. opening speed, approx. m/sec.
	Relay control	Max. closing speed, approx. m/s
Security features	DIN EN 13241	
Resistance to wind load	DIN EN 12424	LDB > 6000 mm
Resistance to water penetration	DIN EN 12425	
Air permeability	DIN EN 12426	
Transmission of heat	DIN EN 12428	
Acoustic insulation	DIN EN 52210 dB	
Curtain stabilisation / WS	Aluminium / spring steel	
Door sizes	Max. width LDB	
	Max. height LDH	
For fitting dimensions (space requirement) see the Technical Manual		
Anti-crash / crash-protection	With automatic / manual start-up	
Door construction	Self-supporting	
Curtain	Fabric / transparent	1.5 (0.9) / 2.0 mm
	Transparent / fabric / transparent	4.0 (< 25 mm²) / 2.4 / 4.0 mm
Door leaf tension		
Guide material / surface	Galvanized steel	
	Galvanized steel, coated, in colours based on RAL	
	Polished stainless steel V2 A	
Shaft / operator cover	Straight	
	30° chamfered (5°)	
Operator and control	Relay control	
	FU control	
	Connecting voltage (3-phase)	
	Connecting voltage (1-phase)	
	Open-Stop-Close button	
	FU control, main switch, all-pole switch-off, 1-phase / 3-phase	
	Fuse protection	3-phase (contactor)
		1-phase
	Protection category	Operator, control
	Emergency-OFF button	3-phase
		1-phase
	Closing edge safety device	With energy chain
	Closing zone monitoring	Safety light grille IP 67
	External route monitoring	Photocell (internal)
		Light grille
	Door area monitoring	Radar presence detector
		Induction loop
	Hold-open phase in sec.	
	Electronic limit switch DES	
Emergency opening	Crank handle	
	Emergency hand chain	
	Counter weight / springs	
	UPS in plastic cabinet (200 × 400 × 200) for FU control 230 V, 1-phase	
Volt-free contacts / impulse generator / safety device		

Flexible high-speed doors

V 4015 SEL R	V 5015 SEL	V 5030 SEL	V 6030 SEL	V 6020 TRL	V 9015 L Stacking	V 10008
●	●	●	●	●	●	●
–	–	Wind protected **1)**	●	●	●	●
–	–	3.0	3.0	1.5	1.5	(0.8) / 1.5
1.2	1.5	2.0	2.0	1.5	1.0	1.5
			–	–	0.6	–
0.8	0.8	0.8	0.8	0.5	0.8 / (0.6)	0.4
●	●	●	●	●	●	●
Class 0	Class 0	Class 0 / 1 with aluminium bottom profile	Class 2	Class 2	Class (2) / 3	Class (2) / 3
Class 0	Class 0	Class 0	Class 0	Class 0	Class 0	Class 0
Class 0	Class 0	Class 0	Class 0	Class 0	Class 0	Class 0
–	–	–	–	–	–	–
–	–	–	–	–	–	–
● / –	● / –	– / ●	– / ●	– / ●	● / –	– / ●
4000 **2)**	5000	5000	5000	6000	9000	10000
4000 **2)**	5000	5000	6000	7000	6000	6250
Crash-protection	Anti-crash	Anti-crash	Crash-protection	–	–	–
●	●	●	●	●	●	–
●	●	●	●	–	(●)	●
–	–	–	– / –	● / ○	– / –	– / –
–	–	–	●	●	–	●
●	●	●	●	●	●	●
○	○	○	○	○	○	○
○	○	○	○	○	○	–
○	○	○	○	○	–	–
○	○	○	○	○	(●)	(○)
–	–	–	●	●	●	●
●	●	●	●	●	○	●
–	–	3 – 400 V, N, PE	3 – 400 V, N, PE	3 – 400 V, N, PE	3 – 400 V, N, PE	3 – 400 V, N, PE
1 – 230 V, N, PE	1 – 230 V, N, PE	1 – 230 V, N, PE	1 – 230 V, N, PE	1 – 230 V, N, PE	1 – 230 V, N, PE	–
●	●	●	●	●	●	●
○ / –	○ / –	○ / ●	○ / ●	○ / ●	○ / ●	– / ●
–	–	20 A, slow-acting	20 A, slow-acting	20 A, slow-acting	20 A (10A), slow-acting	20 A, slow-acting
16 A, slow-acting	16 A, slow-acting	16 A, slow-acting	16 A, slow-acting	16 A, slow-acting	16 A, slow-acting	16 A, slow-acting
IP 54	IP 54	IP 54	IP 54	IP 54	IP 54	IP 54
○	○	○	●	●	●	●
–	–	●	○	○	○	○
○	○	○	–	–	–	●
●	●	●	●	●	●	–
○	○	○	○	○	○	(●)
○	○	○	○	○	○	○
○	○	○	○	○	○	○
○	○	○	○	○	○	○
1 – 200	1 – 200	1 – 200	1 – 200	1 – 200	1 – 200	1 – 200
●	●	●	●	●	●	●
●	●	●	●	●	●	–
–	–	–	○	○	○	●
– / –	– / –	– / –	○ / –	– / –	– / –	– / –
○	○	○	○	○	○	–
○ / ○ / ○	○ / ○ / ○	○ / ○ / ○	○ / ○ / ○	○ / ○ / ○	○ / ○ / ○	○ / ○ / ○

● = Standard
○ = Optional

Ckt. = Characteristic
WS = Wind lock

1) = optional aluminium bottom profile
2) = not all dimensions are possible yet

Overview of door types

Construction and quality features

Use	Internal door	
	External door	
Speed	FU control (3-phase)	Max. opening speed, approx. m/s
	FU control (1-phase)	Max. opening speed, approx. m/s
		Max. closing speed, approx. m/s
Security features	DIN EN 13241	
Resistance to wind load	DIN EN 12424	
Resistance to water penetration	DIN EN 12425	
Air permeability	DIN EN 12426	
Transmission of heat	DIN EN 12428	
Curtain stabilisation / WS	Aluminium / spring steel	
Door sizes	Max. width LDB	
	Max. height LDH	
For fitting dimensions (space requirement) see the Technical Manual		
Anti-crash / crash-protection	With automatic / manual start-up	
Door construction	Self-supporting	
Curtain	Fabric / transparent	1.5 / 2.0 mm
	Transparent / fabric / transparent	4.0 mm
	Door leaf, PU-foamed 80 mm	
	PE foam, 20 mm	
Door leaf tension		
Guide material / surface	Galvanized steel	
	Galvanized steel, coated, in colours based on RAL	
	Polished stainless steel V2 A	
Shaft / operator cover	Straight	
	30° chamfered (5°)	
Operator and control	WU control	
	FU control	
	Connecting voltage (3-phase)	
	Connecting voltage (1-phase)	
	Open-Stop-Close button	
	FU control, main switch, all-pole switch-off, 1-phase / 3-phase	
	Fuse protection	3-phase
		1-phase
	Protection category	Operator, control
	Emergency-OFF button	
	Closing edge safety device	With energy chain
	Closing zone monitoring	Safety light grille IP 67
	External route monitoring	Photocell (internal)
		Light grille
	Door area monitoring	Radar presence detector
		Induction loop
	Hold-open phase in sec.	
	Electronic limit switch DES	
Emergency opening	Crank handle	
	Emergency hand chain	
	Counter weight / springs	
	UPS in plastic cabinet (200 × 400 × 200) for FU control 230 V, 1-phase	
Volt-free contacts / impulse generator / safety device		

Flexible high-speed doors for special applications

V 5030 MSL	V 3015 RW	ISO Speed Cold	V 4015 ISO L	V 2515 Food L	V 2012
●	●	●	●	●	●
–	–	●	–	–	–
–	–	2.0	–	–	–
1.5	1.5	–	1.5	1.2	1.2
0.8	0.8	0.5	0.5	0.5	0.5
●	●	●	●	●	●
Class 0	Class 0	Class 3	Class 0	Class 0	Class 0
Class 0	Class 0	Class 0	Class 0	Class 0	Class 0
Class 0	Class 0	Class 0	Class 0	Class 0	Class 0
–	–	0.3 W/(m²·K)	1.9 W/(m²·K)	–	–
– / ●	● / –	– / –	● / –	– / ●	– / ●
4000	3000	5000	4000	2500	2500
4000	3000	5000	4500	3000	2500
–	Anti-crash	–	–	Anti-crash	Anti-crash
●	●	–	–	●	●
–	●	●	●	●	●
●	–	–	–	–	–
–	–	●	–	–	–
–	–	–	●	–	–
–	–	–	–	–	–
●	●	●	●	–	●
○	○	○	○	–	○
○	○	○	○	●	○
○	○	–	○	–	●
○	○	–	–	(●)	–
–	–	–	(○)	–	–
●	●	●	●	●	●
3 – 400 V, N, PE	–	3 – 400 V, N, PE	–	–	–
1 – 230 V, N, PE	1 – 230 V, N, PE	–	1 – 230 V, N, PE	1 – 230 V, N, PE	1 – 230 V, N, PE
●	●	●	●	●	●
○ / ●	● / –	– / ●	○ / –	● / –	– / –
20 A, slow-acting	–	20 A, slow-acting	–	–	–
16 A, slow-acting	16 A, slow-acting	–	16 A, slow-acting	16 A, slow-acting	16 A, slow-acting
IP 54	–	IP 54	IP 54	–	–
●	●	○	○	○	○
–	With spiral cable	●	–	–	–
●	–	–	●	●	–
○	(●)	(●)	–	○	–
○	○	○	○	○	●
○	○	○	○	○	○
○	○	○	○	○	○
1 – 200	1 – 200	1 – 200	1 – 200	1 – 200	1 – 200
●	●	●	●	●	●
●	–	●	●	–	–
–	–	○	–	–	–
– / –	● / –	● / –	– / –	– / –	● / –
○	–	–	○	○	–
○ / ○ / ○	○ / ○ / ○	○ / ○ / ○	○ / ○ / ○	○ / ○ / ○	○ / ○ / ○

● = Standard
○ = Optional

Ckt. = Characteristic
WS = Wind lock

Overview of door types

Construction and quality features

● = Standard
○ = Optional

Use	Internal door	
	External door	
Speed	FU control (3-phase)	Max. opening speed, approx. m/s
	FU control (1-phase)	Max. opening speed, approx. m/s
		Max. closing speed, approx. m/s
Security features	DIN EN 13241	
Resistance to wind load	DIN EN 12424	
Resistance to water penetration	DIN EN 12425	
Air permeability	DIN EN 12426	
Transmission of heat	DIN EN 12428	
Curtain stabilisation / WS	Aluminium / spring steel	
Door sizes	Max. width LDB	
	Max. height LDH	
Fitting dimensions (space requirement)		
Anti-crash / crash-protection	With automatic / manual start-up	
Door construction	Self-supporting	
Curtain / door leaf	Fabric / transparent	1.5 / 2.0 mm
	transparent	4.0 mm
Curtain / door leaf tension		
Guide material / surface	Galvanized steel	
	Galvanized steel, coated, in colours based on RAL	
	Polished stainless steel V2 A	
Shaft / operator cover	Straight	
	30° chamfered (5°)	
Operator and control	WU control	
	FU control	
	Connecting voltage	3-phase
		1-phase
	Open-Stop-Close button	
	FU control, main switch, all-pole switch-off, 1-phase / 3-phase	
	Fuse protection	3-phase
		1-phase
	Emergency-OFF button	
	Closing edge safety device	With energy chain
	Closing zone monitoring	Safety light grille IP 67
	External route monitoring	Photocell (internal)
		Light grille
	Door area monitoring	Radar presence detector
		Induction loop
	Hold-open phase in sec.	
	Electronic limit switch DES	
Emergency opening	Crank handle	
	Emergency hand chain	
	Counter weight / springs	
	UPS in plastic cabinet (200 × 400 × 200) for FU control 230 V, 1-phase	
Volt-free contacts / impulse generator / safety device		

Flexible high-speed doors for special applications

V 3015 CLEAN	V 3009 Conveyor	V 1401 ATEX	HT 3530
●	●	●	●
–	–	–	–
–	–	–	–
1.5	(AKE 0.8)	1.4	3.0
0.5	(AKE 0.8)	0.5	1.0
●	●	●	●
Class 0	Class 0	Class 0	Class 0
Class 0	Class 0	Class 0	Class 0
Class 0	Class 0	Class 0	Class 0
–	–	–	–
– / ●	● / –	● / –	– / –
2500	3000	4000	3500
3000	3000	4000	3500
–	–	–	–
●	●	●	–
–	●	●	●
●	–	–	–
–	–	–	●
–	●	●	●
–	○	○	○
●	○	○	○
–	○	○	●
(●)	○	○	○
–	●	–	–
●	○	●	●
–	–	–	–
1 – 230 V, N, PE	1 – 230 V, N, PE	1 – 230 V, N, PE	1 – 230 V, N, PE
●	●	●	●
○ / –	○ / –	● / –	○ / –
–	–	–	–
16 A, slow-acting	10 A (16 A, slow-acting / FU)	16 A, slow-acting	16 A, slow-acting
○	○	○	○
●	●	●	●
–	–	–	–
(●)	(●)	(●)	(●)
○	○	–	○
○	○	○	○
○	○	○	○
1 – 200	1 – 200	1 – 200	1 – 200
●	●	–	●
●	●	●	–
–	–	–	–
– / –	– / –	– / –	– / ●
○	○	–	○
○ / ○ / ○	○ / ○ / ○	○ / ○ / ○	○ / ○ / ○

● = Standard
○ = Optional

Ckt. = Characteristic
WS = Wind lock

Hörmann Product Range

Everything from a single source for your construction project

1 Sectional doors
These space-saving door systems can be adapted to different industrial facilities using various track applications. Hörmann offers you tailored solutions for every application.

2 Rolling shutters and rolling grilles
Thanks to a simple construction with just a few components, rolling shutters are both economical and sturdy. Hörmann supplies rolling shutters in widths and heights of up to 11.75 m and 9 m respectively, or as special doors which are even higher.

3 High-speed doors
Hörmann high-speed doors are used both inside and as exterior doors to optimise the flow of traffic, improve room conditions and save energy. The Hörmann programme includes vertically and horizontally opening transparent doors with flexible curtains.

4 Loading technology
Hörmann offers you complete loading systems for the logistics sector. The advantages: reliable planning, dependable execution of construction work and high functionality thanks to precisely matched components.

5 Fire sliding doors
Hörmann can provide you with single or double-leaf sliding door solutions suitable for all areas and required fire protection classes.

6 Multi-function doors and reinforced internal doors
Hörmann multi-function doors and reinforced internal doors are suitable for indoor and outdoor use. Our single and double-leaf doors can be used wherever robust door elements are required. With numerous additional functions, such as fire and smoke protection, acoustic insulation or burglar protection.

7 Box frame parts
For areas in which appearance is important, such as administrative buildings, Hörmann offers you fire and smoke protection doors as well as steel and aluminium fixed glazing and automatic sliding doors, also suited for special fire protection requirements.

8 Visibility windows
Hörmann visibility glazings are used as windows or room-high elements to provide more light and better visibility.

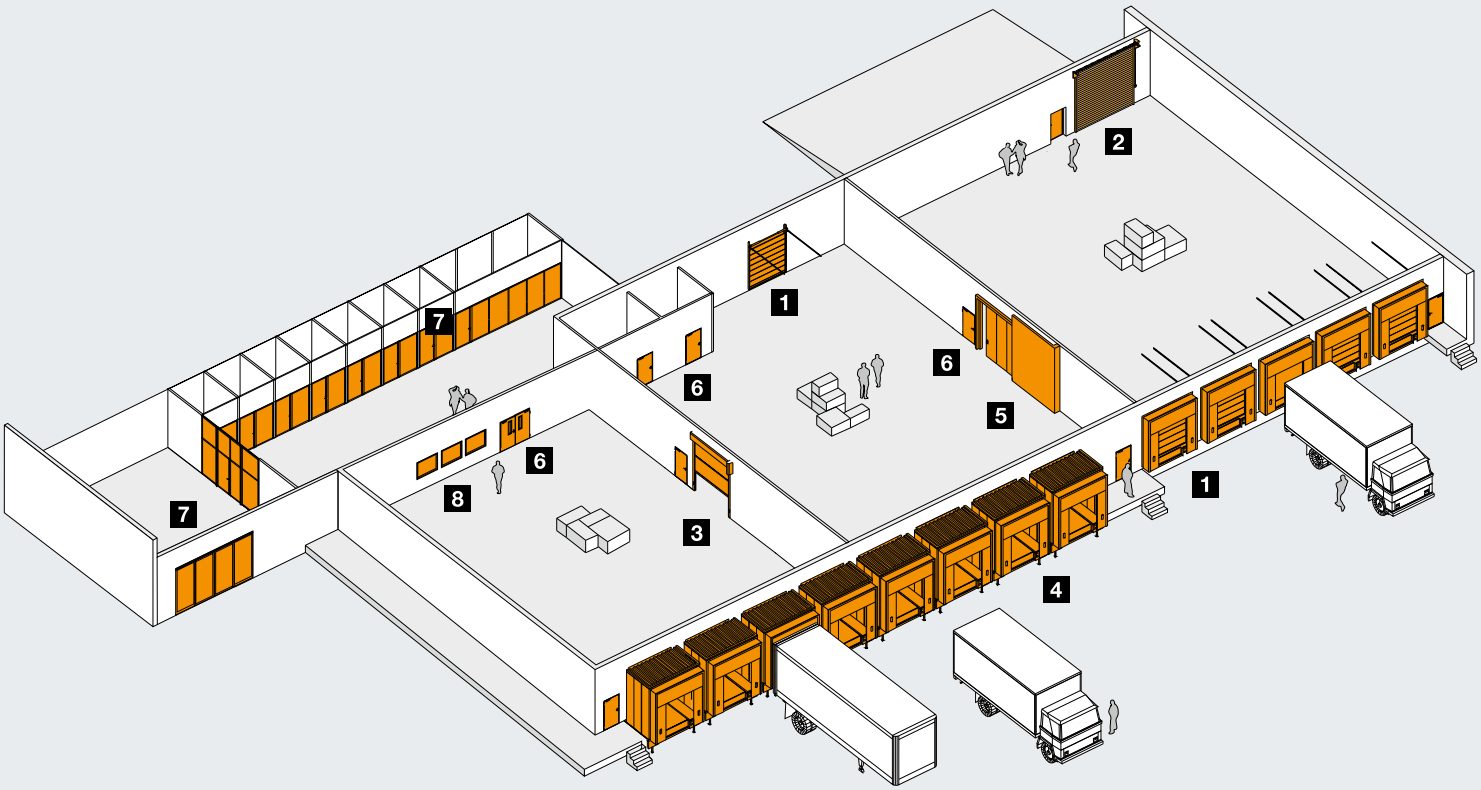

Quick service with testing, maintenance and repairs
Our extensive service network means that we are always nearby and at your service around the clock.

1


5


2


6


3


7


4


8


Hörmann: Quality without Compromise


Hörmann KG Amshausen, Germany


Hörmann KG Antriebstechnik, Germany


Hörmann KG Brandis, Germany


Hörmann KG Brockhagen, Germany


Hörmann KG Dissen, Germany


Hörmann KG Eckelhausen, Germany


Hörmann KG Freisen, Germany


Hörmann KG Ichtershausen, Germany


Hörmann KG Werne, Germany


Hörmann Genk NV, Belgium


Hörmann Alkmaar B.V., Netherlands


Hörmann Legnica Sp. z o.o., Poland


Hörmann Beijing, China


Hörmann Tianjin, China


Hörmann LLC, Montgomery IL, USA


Hörmann Flexon, Leetsdale PA, USA

Hörmann is the only manufacturer worldwide that offers you a complete range of all major building products from one source. We manufacture in highly-specialised factories using the latest production technologies. The close-meshed network of sales and service companies throughout Europe, and activities in the USA and China, make Hörmann your strong partner for first-class building products, offering “Quality without Compromise”.

GARAGE DOORS

OPERATORS

INDUSTRIAL DOORS

LOADING EQUIPMENT

HINGED DOORS

DOOR FRAMES

Issue 02.2013 / Print 06.2013 / HF 84894 EN / PDF www.hoermann.com

HÖRMANN